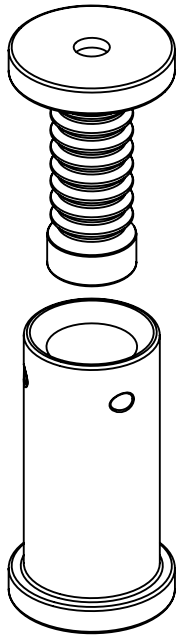

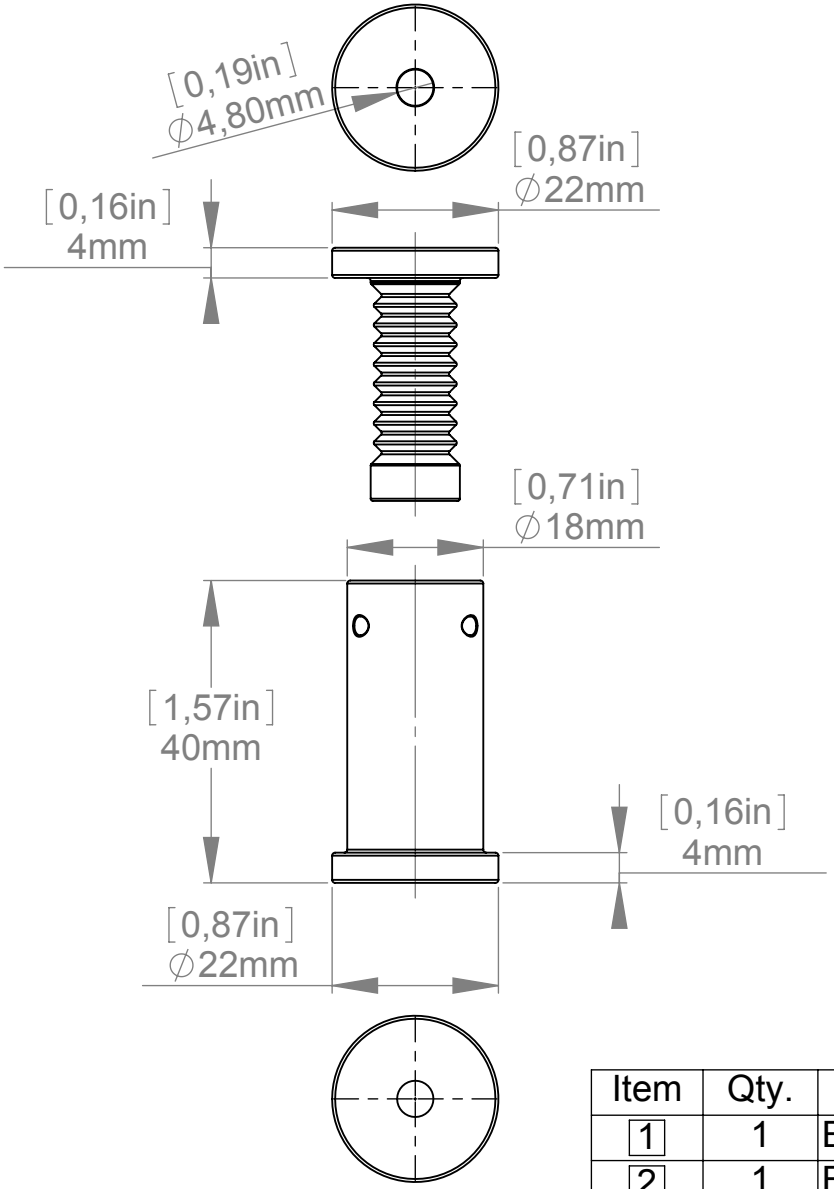

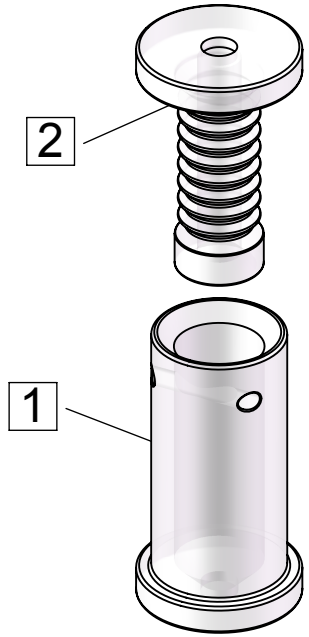

Color	Item No.
Clear	QSJSB4H

Item	Qty.	Description
1	1	Expander I-QS Adhesive or Screw Mounted Body
2	1	Expander I-QS Adhesive or Screw Mounted Head

Title : Expander I-QS		Scale : 1:1		
		Sizes : Letter Landscape	Customer:	
	Material:	Finish	Qty :	Rep :
	N°programme laser	N°prog. Mécanum.	N° Plan : Expander I-QS	