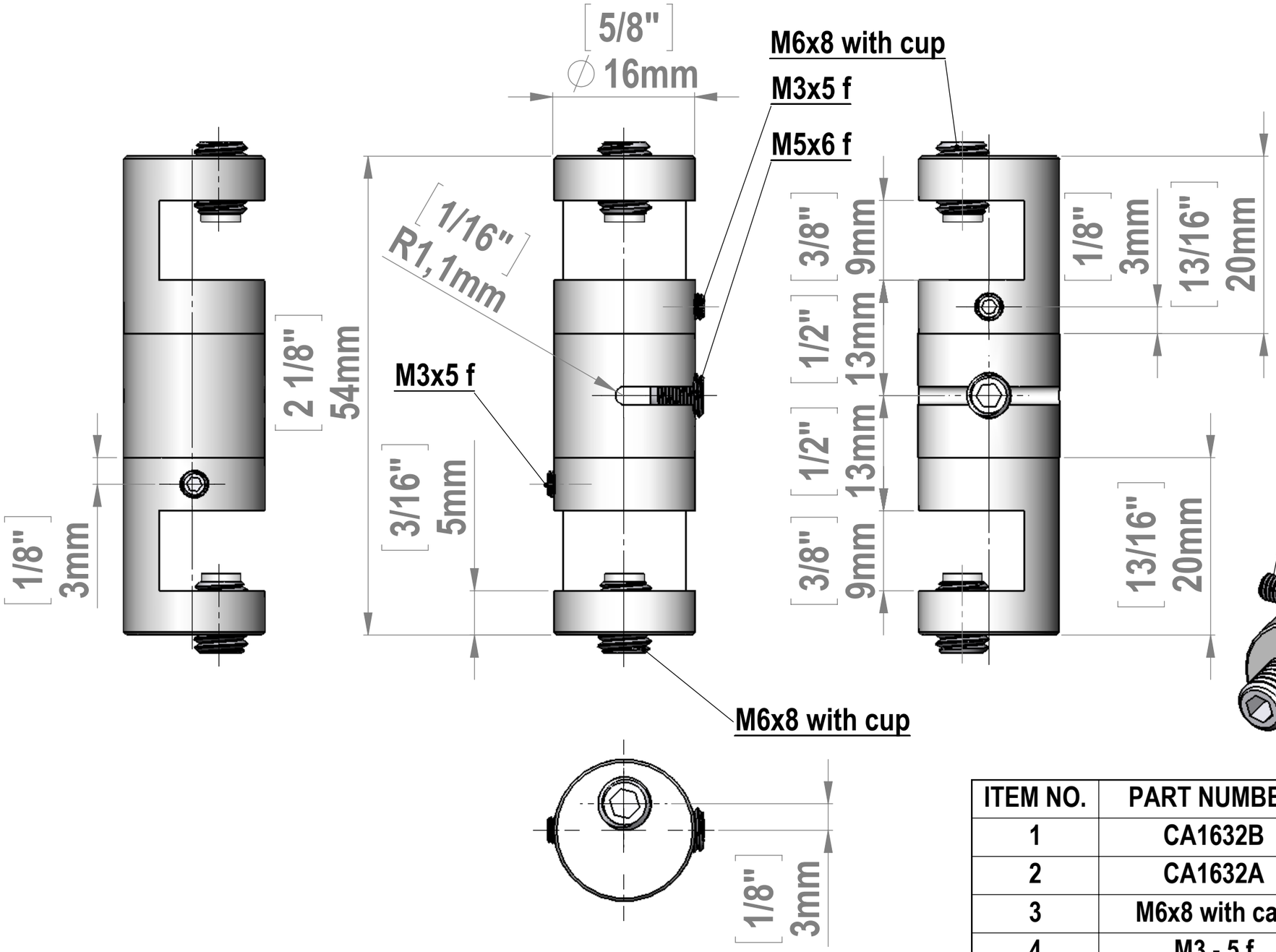

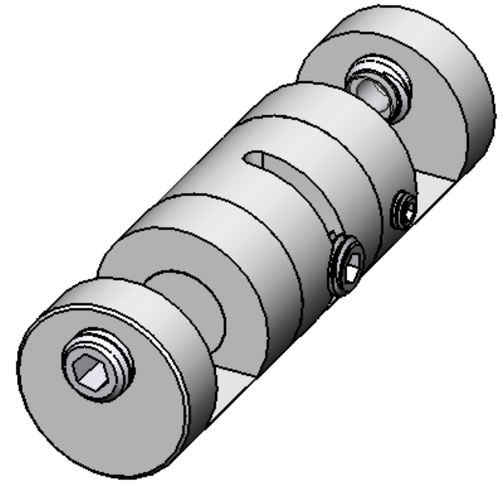

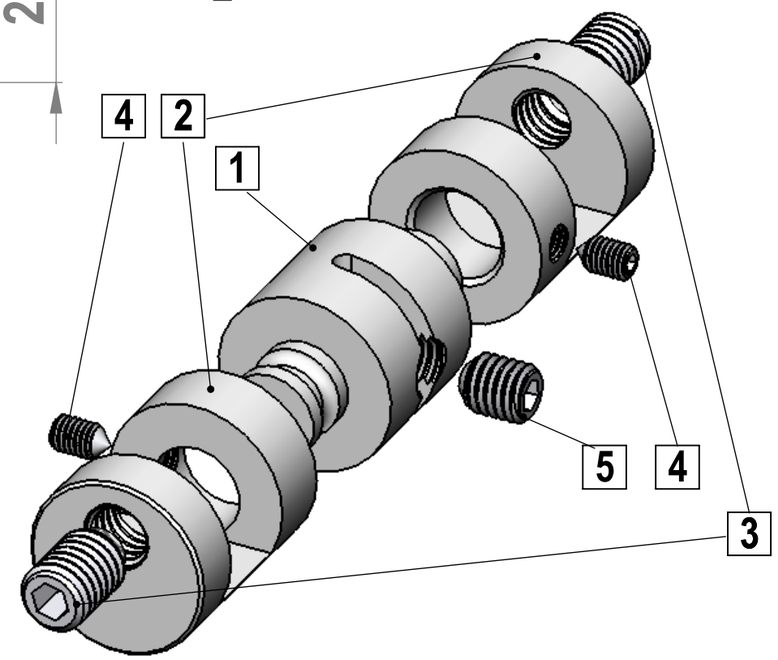

ITEM NO.	PART NUMBER	DESCRIPTION	QTY.
1	CA1632B		1
2	CA1632A		2
3	M6x8 with cap		2
4	M3 - 5 f		2
5	M5x6 f		1

Title : CA1632		Scale : 2:1	
		Sizes : Letter Landscape	Customer:
	Material:	Finish	Qty : / Rep :
	N°programme laser	N°prog. Mécanum.	N° Plan : CA1632