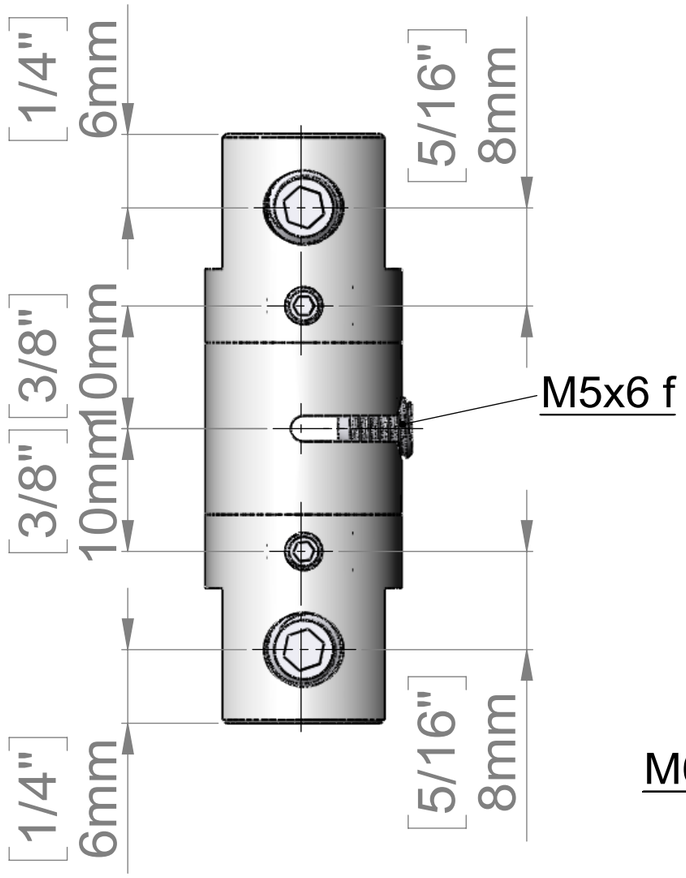

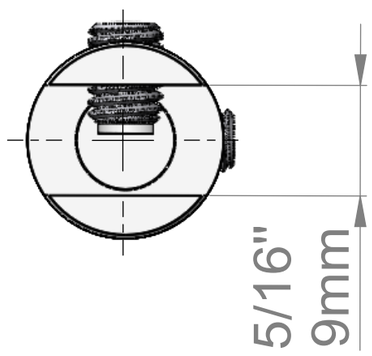

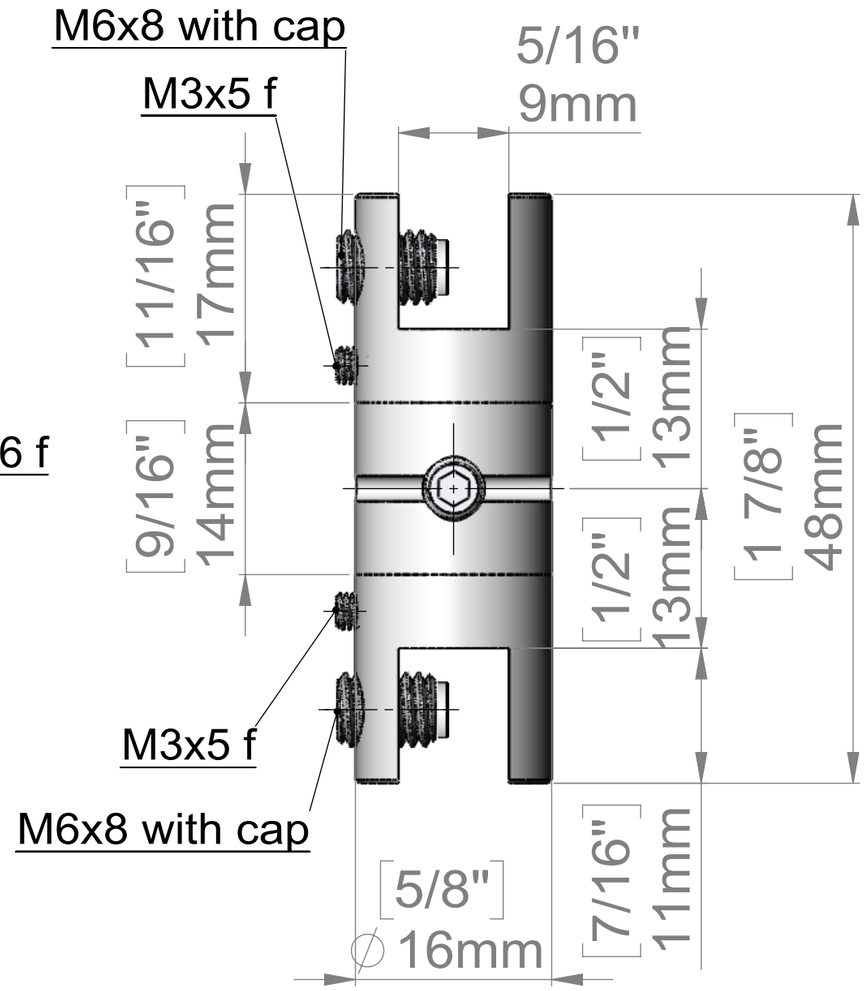

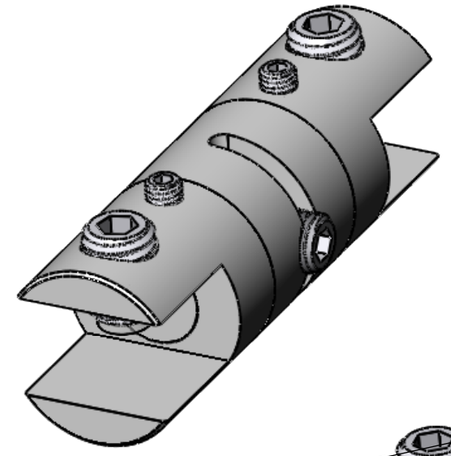

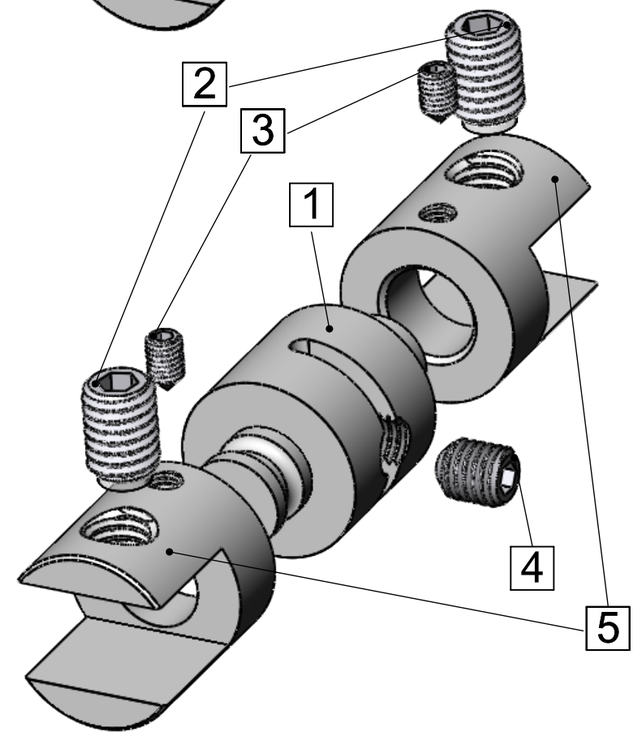

ITEM NO.	PART NUMBER	DESCRIPTION	QTY.
1	CA1622B		1
2	M6x8 with cap		2
3	M3 - 5 f		2
4	M5x6 f		1
5	CA1622A		2

Title : CA1622		Scale : 2:1	
		Sizes : Letter Landscape	Customer:
	Material:	Finish	Qty : / Rep :
	N°programme laser	N°prog. Mécanum.	N° Plan : CA1622